DATA SHEET

vibro-meter®

CA134 piezoelectric accelerometer

CA134
(sensor only version)

IECEx KGS TIIS

KEY FEATURES AND BENEFITS

- From the vibro-meter® product line
- Sensitivity: 10 pC/g
- Frequency response: 0.5 to 6000 Hz
- Temperature range:
  −54 to 500°C
  −253 °C (20 K) to 500°C for cryogenic version
- Ex certified for use in hazardous areas (potentially explosive atmospheres)
- Symmetrical sensor with internal case insulation and differential output
- Hermetically welded high-temperature nickel alloy case
- Available as a sensor only or with an integral cable

APPLICATIONS

- Vibration monitoring over a wide temperature range, including cryogenic temperatures
- Hazardous areas (potentially explosive atmospheres) and/or harsh industrial environments

DESCRIPTION

The CA134 is a high-temperature piezoelectric accelerometer from Meggitt's vibro-meter® product line.

The CA134 sensor features a compression-mode measuring element with internal case insulation in a high-temperature nickel alloy case (housing).

The CA134 is available as a sensor only or fitted with an integral mineral-insulated (MI) cable that is protected by a double braid and terminated with a vibro-meter® high-temperature connector. The sensor and cable are hermetically welded to produce a sealed leaktight assembly. The sensor only version allows different cable assemblies to be used depending on the environmental/ temperature requirements of the application.

All versions of the CA134 are Ex certified for installation in potentially explosive atmospheres (hazardous areas).

The piezoelectric material used and the design of the CA134 ensures an extremely stable and reliable device that is suitable for the long-term monitoring and measurement of vibration over wide temperature ranges in severe environments, such as gas turbines or cryogenic applications.

For specific applications, contact your local Meggitt representative.

Meggitt SA, Route de Moncor 4, Case postale, 1701 Fribourg, Switzerland

Tel: +41 26 407 11 11
Fax: +41 26 407 13 01
energy@ch.meggitt.com
www.meggittsensing.com/energy
www.meggitt.com

SPECIFICATIONS

General

Input power requirements	: None
Signal transmission	: 2-pin system, insulated from case, charge output
Signal processing	: Charge converter (IPC70x signal conditioner)

Operating

(At 23°C ±5°C, 73°F ±9°F)

Sensitivity (at 120 Hz with 5 g, see **Calibration on page 4**)	: 10 pC/g ±5%
Dynamic measurement range	: 0.001 to 500 g peak
Overload capacity (spikes)	: Up to 1000 g peak
Linearity	: ±1% over dynamic measurement range
Transverse sensitivity	: <5%
Resonant frequency	: >14 kHz nominal
Frequency response	
• 0.5 to 3500 Hz	: ±5% (lower cutoff frequency is determined by the signal conditioner)
• 3500 to 6000 Hz	: <10%
Internal insulation resistance	: 10^8 Ω minimum at 23°C (73°F). 10^5 Ω minimum at 500°C (932°F).
Capacitance	
• Sensor head	: 20 pF nominal between pin (+ or −) and case (ground). 450 pF nominal between pins (+ and −).
• MI cable (integral cable version only)	: 350 pF/m nominal between pin (+ or −) and case (ground). 220 pF/m nominal between pins (+ and −).

Environmental

Temperature range	
• Continuous operation	: −54 to 500°C (−65 to 932°F). Note: Cryogenic version has a minimum operating temperature of −253°C (20 K).
• Short-term survival	: −70 to 520°C (−94 to 968°F). Note: Cryogenic version has a minimum survival temperature of −253°C (20 K).
Maximum temperature error (with respect to 23°C, 73°F)	
• −253°C (20 K)	: −5%
• 500°C	: +10%
Corrosion, humidity	: Special high-temperature nickel alloy, stainless steel, hermetically welded
Shock acceleration	: <2000 g peak (half sine, 1 ms duration) along sensitive axis
Base strain sensitivity	: $<7 \times 10^{-4}$ g/με

SPECIFICATIONS *(continued)*

Potentially explosive atmospheres

Ex approved for use in hazardous areas

Type of protection Ex i: intrinsic safety		
Europe	EC type examination certificate	Ⓔx II 1 G (Zones 0, 1, 2) Ex ia IIC T6…510°C Ga LCIE 02 ATEX 6110 X
International	IECEx certificate of conformity	Ex ia IIC T6…510°C Ga IECEx LCI 06.0008X *Note: Not engraved on the product marking.*
North America	cCSAus certificate of compliance	Class I, Division 1, Groups A, B, C, D Ex ia (T6…T1) cCSAus 1636188
Korea	KGS certificate of conformity	Ex ia IIC T6 to T510°C KGS 14-GA4BO-0130X *Note: Not engraved on the product marking, except for PNR 144-134-000-612.*
Japan	TIIS certificate of conformity	ib IIC T1 TIIS TC 20432 *Note: PNR 144-134-000-611 only. Not engraved on the product marking.*
		ib IIC T1 TIIS TC 20544 *Note: PNR 144-134-000-612 only. Not engraved on the product marking.*
Russian Federation	EAЭC RU certificate of conformity	0Ex ia IIC T6...510°C Ga X EAЭC RU C-CH.AД07.B.03042/21 *Note: Not engraved on the product marking, except for PNR 144-134-000-203.*
Brazil	INMETRO certificate of conformity	Ex ia IIC T6...510°C Ga BVC20.3862-X *Note: Not engraved on the product marking, except for PNR 144-134-000-612/613.*
China	CNEx Certificate	Ex ia IIC T6~T510°C Ga CNEx 22.2014X *Note: Not engraved on the product marking.*

SPECIFICATIONS *(continued)*

Type of protection Ex nA: non-sparking		
Europe	Voluntary type examination certificate	Ⓔx II 3G (Zone 2) Ex nA IIC T6…510°C Gc LCIE 09 ATEX 1043 X
International	IECEx certificate of conformity	Ex nA IIC T6…510°C Gc IECEx LCI 10.0017X *Note: Not engraved on the product marking.*
Russian Federation	EAЭC RU certificate of conformity	2Ex nA IIC T6...510°C Gc EAЭC RU C-CH.AД07.B.03042/21 *Note: Not engraved on the product marking, except for PNR 144-134-000-203.*
Brazil	INMETRO certificate of conformity	Ex nA IIC T6...510°C Gc BVC20.3863-X *Note: Not engraved on the product marking, except for PNR 144-134-000-612/613.*

⚠ **For specific parameters of the mode of protection concerned and special conditions for safe use, refer to the Ex certificates that are available from Meggitt SA.**

⚠ **For the most recent information on the Ex certifications that are applicable to this product, refer to the *Ex product register* (*PL-1511*) document that is available from Meggitt SA.**

Approvals

Conformity	: European Union (EU) declaration of conformity (CE marking). EAC marking, Eurasian Customs Union (EACU) certificate/ declaration of conformity.
Electromagnetic compatibility	: EN 61000-6-2:2005. EN 61000-6-4:2007 + A1:2011.
Electrical safety	: EN 61010-1:2010
Environmental management	: RoHS compliant (2011/65/EU)
Hazardous areas	: Ex approved (see **Potentially explosive atmospheres on page 3**)
Russian federal agency for technical regulation and metrology (Rosstandart)	: Pattern approval certificate OC.C.28.004.A N° 59463

Calibration

Dynamic calibration at factory at 5 g peak and 120 Hz (23°C, 73°F). No subsequent calibration necessary.

SPECIFICATIONS *(continued)*

Physical

Case (housing) material	: Special high-temperature nickel alloy and stainless steel
Dimensions	: See **Mechanical drawings starting on page 6**
Weight	
• Sensor head	: 120 g (0.26 lb) approx.
• MI cable (integral cable version only)	: 140 g/m (0.094 lb/ft) approx.
Mounting	: Three M4 × 16 Allen screws and three M4 spring-lock washers with a nominal tightening torque of 4 N•m (3 lb-ft). Note: Electrical insulation of the mounting surface is not required. See Mounting adaptors in **Accessories on page 8**. Refer also to the *Vibration measurement chains using CAxxx piezoelectric accelerometers installation manual*.
Connector	
• Sensor only version	: High-temperature, rugged circular, threaded coupling, 2-pin connector with keyway (vibro-meter® 7/16"-27UNS-2A / CG505). Mates with connectors used by the recommended cable assemblies (vibro-meter® 7/16"-27UNS-2B or CG505).
• Integral cable version	: vibro-meter® high-temperature connector (Hex. 7/16"). Mates with connectors used by the recommended extension cable assemblies (vibro-meter® 7/16"-27UNS-2B or CG505).
Recommended cable assemblies (sensor only version)	: EC069, EC112, EC119, EC222 or EC390. See Cable assemblies in **Accessories on page 8**.
Recommended extension cable assemblies	: EC119, EC222 or EC390. See Cable assemblies in **Accessories on page 8**.

MECHANICAL DRAWINGS

Sensor only version

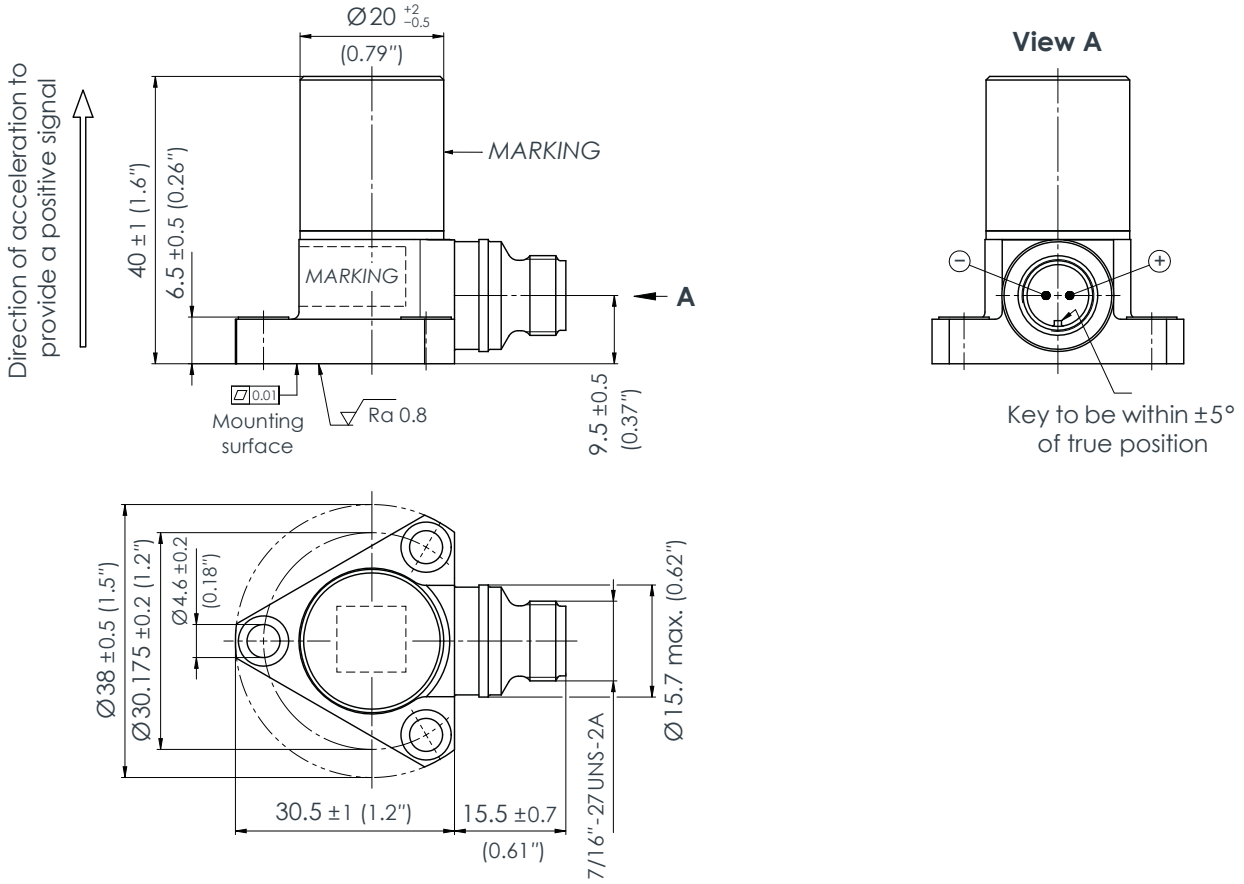

Note: All dimensions are in mm (in) unless otherwise stated.

MECHANICAL DRAWINGS *(continued)*

Integral cable version

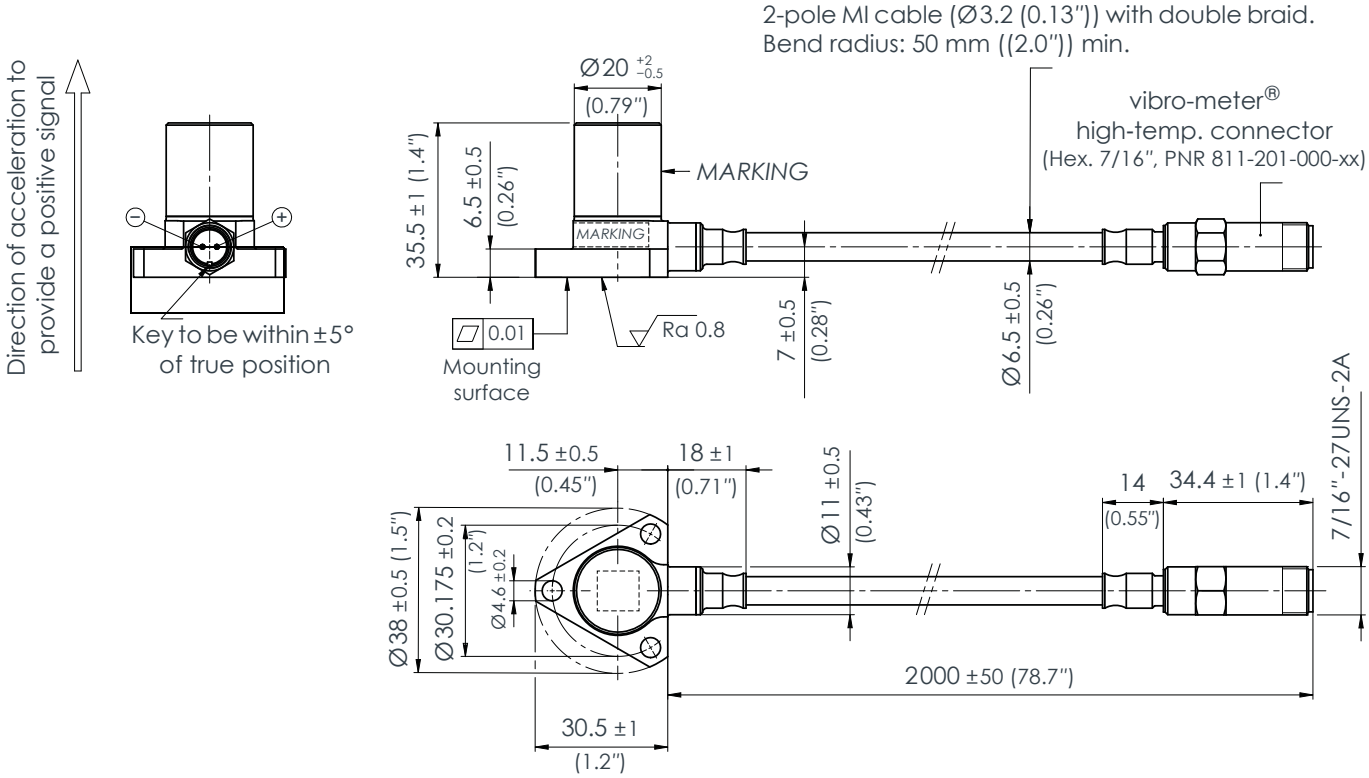

Wiring diagram

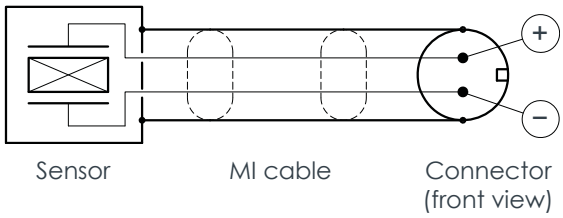

Note: All dimensions are in mm (in) unless otherwise stated.

ORDERING INFORMATION

To order please specify

Type	Designation	Part number (PNR)
CA134	Different versions of the CA134 piezoelectric accelerometer:	
	– Sensor only version	144-134-000-203
	– Integral cable version Note: Integral cable is a 2 m cable length, mineral-insulated (MI) cable with double braid, terminated with a vibro-meter® high-temperature connector.	144-134-000-613

ACCESSORIES

Item	Type	Part number (PNR)
Cable assemblies	EC069 High-temperature cable assembly with vibro-meter® high-temperature connector to vibro-meter® high-temperature connector, and mineral-insulated (MI) cable. Up to 650°C (1202°F). Refer to product drawing 921-069-000D101.	921-069-000-x01
	EC112 Cable assembly with vibro-meter® high-temperature connector to vibro-meter® LEMO type 0 connector, and mineral-insulated (MI) cable. Refer to product drawing 921-112-000D501.	921-112-000-5x1
	EC119 Cable assembly with vibro-meter® CG505 connector to flying leads, and low-noise, shielded, twisted pair cable (K205A) with sealed flexible protection (leaktight). Refer to product drawing 922-119-000D003.	922-119-000-003
	EC222 Cable assembly with vibro-meter® CG505 connector to flying leads, and low-noise, shielded, twisted pair cable (K221). Refer to product drawing 922-222-000D002.	922-222-000-002
	EC390 Cable assembly with vibro-meter® CG505 connector to flying leads, and low-noise, shielded, twisted pair cable (K231) with sealed flexible protection (leaktight). Refer to product drawing 922-390-000D003.	922-390-000-003

Note: The cable length must be specified when ordering a cable assembly.

Mounting adaptors	TA104 Mounting adapter for CA/CE13x and CA/CE28x, with stainless-steel hexagonal base with M8 stud. Refer to product drawing 144-136-301D101.	144-136-301-101
	TA105 Mounting adapter for CA/CE13x and CA/CE28x, with thermally isolating base (300°C, 572°F). Refer to product drawing 144-136-302D101.	144-136-302-101

Meggitt (Meggitt PLC) is a leading international engineering company, headquartered in England, that designs and delivers high-performance components and subsystems for aerospace, defence and selected energy markets. Meggitt comprises four customer-aligned divisions: Airframe Systems, Engine Systems, Energy & Equipment and Services & Support.

The Energy & Equipment division includes the Energy Sensing and Controls product group that specialises in sensing and monitoring solutions for a broad range of energy infrastructure, and control valves for industrial gas turbines, primarily for the Power Generation, Oil & Gas and Services markets. Energy & Equipment is headquartered in Switzerland (Meggitt SA) and incorporates the vibro-meter® product line, which has over 65 years of sensor and systems expertise and is trusted by original equipment manufacturers (OEMs) globally.

In this publication, a dot (.) is used as the decimal separator and thousands are separated by thin spaces. Example: 12345.67890.

Sales offices

Meggitt has offices in more than 30 countries. For a complete list, please visit our website.

Local representative

Head office

Meggitt SA
Route de Moncor 4
Case postale
1701 Fribourg
Switzerland

Tel: +41 26 407 11 11
Fax: +41 26 407 13 01
energy@ch.meggitt.com
www.meggittsensing.com/energy
www.meggitt.com